Manly Council
Council Offices 1 Belgrave Street Manly NSW 2095
PO Box 82 MANLY NSW 1655 AUSTRALIA
Telephone: 02 9976 1500 Fax: 02 9976 1400 DX 9205 Manly
records@manly.nsw.gov.au www.manly.nsw.gov.au
ABN 43 662 868 065

CONSTRUCTION OF CONCRETE VEHICULAR CROSSING/S BY PRIVATE CONTRACTORS

Contractor Details

Contractor's name: _____

Contractor's address: _____

Contact Details: Phone (daytime): Mobile: _____

Email: _____

Has a Development Application been submitted for the property? ☐ **Yes** DA no. _____ ☐ **No**

If yes, please state DA Number, and attach a copy of the Council stamped DA approved site plans together with the vehicular crossing x-section. X-sections to include information such as grades, existing and proposed RL's. See SPECIFICATION, clause 17.

Contractor's Certificate

I have carefully read Manly Council's "Specification for Construction of Vehicle Crossings by Private Contractors", and I hereby undertake to carry out the construction of a vehicle crossing at the following location in strict accordance therewith. I will make the necessary arrangements for Council inspection in accordance with clause 4 of the Specification:

Address: _____

Name of Owner(s): _____ Phone No.: _____

Signature(s) of Owner(s): _____

Name(s) and Signature(s) of Adjoining Landowner(s) [in the case of a shared driveway]:

I/We, being the owners of ..... **[INSERT ADDRESS OF ADJOINING LAND]** consent to the construction of so much of the work as relates to the shared driveway as relates to our land. (See SPECIFICATION, clause 2.)_____

I have constructed similar concrete work which may be inspected at:

Location	Nature of work	Owner	Owner's Phone No.

This certificate is to be signed by the Contractor as acknowledgement that they clearly understand the class of work that is to be produced and that the work will be carried out under Council's supervision. This certificate is to be returned by the owner to Council at least forty-eight (48) hours before work commences.

Application Fee – As per Fees & Charges

The fee covers the cost of assessing submitted plans to Council Standards and three inspections.

Inspections will be done at the following stages:

- ☐ Initial inspection to go over driveway design, specifications and extent of work;
- ☐ Inspection of sub-grade, formwork and reinforcement prior to pouring concrete or laying pavers;
- ☐ Final inspection after completion of the work to be advised by applicant.

Office Use: Final Inspection Type Code: 35

Fee Paid: _____ Receipt No.: _____

Date: _____ Customer Service Officer: _____

☐ Draw Sketch of Vehicular Crossing if only replacing existing. A copy of the sketch and Council Specification is to be provided to the builder/concreter or contractor and kept on site at all times.

or

☐ Attach Council Stamped site plan, X-sections and Long sections of Vehicular Crossing with proposed and existing levels and grades if driveway is a part of a Development Application. A copy of the stamped plan and Council Specification is to be provided to the builder/concreter or contractor and kept on site at all times

Manly Council
Council Offices 1 Belgrave Street Manly NSW 2095
PO Box 82 MANLY NSW 1655 AUSTRALIA
Telephone: 02 9976 1500 Fax: 02 9976 1400 DX 9205 Manly
records@manly.nsw.gov.au www.manly.nsw.gov.au
ABN 43 662 868 065

SPECIFICATION FOR THE CONSTRUCTION OF CONCRETE VEHICULAR CROSSINGS BY PRIVATE CONTRACTORS

1. GENERAL

Council's general policy is that the construction of a crossing is to be carried out by an experienced concrete contractor employed by the owner of the property to be served.

2. APPLICATION FOR PERMISSION

Application for permission to construct a crossing is made by submission of the Vehicle Crossing by Private Contractor Form. The application must clearly set out the name, address and telephone number of the contractor. In addition, the signatures of the owner(s) of the subject land, as well as the owner(s) of the adjoining land (in any case involving a shared driveway), are required. In the case of a shared driveway, it is the responsibility of the owner(s) who wish to carry out the work to consult with and otherwise obtain the consent of the adjoining landowners to the extent that any part of the work relates to land belonging to the adjoining landowners.

3. REQUIRED PLANS TO BE INCLUDED IN THE DRIVEWAY APPLICATION

If the driveway is a part of a Development Application, please attach the Council Stamped site plan together with the x-sections and long sections of Vehicular Crossing with proposed and existing levels and grades at the scale of 1:20. A copy of the stamped plan and Council Specification is to be provided to the builder/concreter or contractor and kept on site at all times.

If the driveway is not part of a Development Application and the levels are to be altered, then Council shall be provided with the long section at the scale of 1:20 with the proposed and existing grades and reduced levels. The proposed design shall be in accordance with the current Council specification and Australian Standard 2890.1

If the levels are not being altered then the works shall be set out in accordance with the Council Specification provided on the Vehicular Crossing Application.

Work must not be commenced before the Driveway Application Form has been submitted and approved.

4. APPROVAL

The Contractor is to be advised by the owner that all work is to be carried out in accordance with the Council's standards, and that no work is to be done without the approval of Council's Engineer.

INITIAL INSPECTION

At least forty-eight (48) hours before commencing any construction work, the owner or contractor shall make a appointment, by date and time, for a join inspection with Council's Engineer on site. At this inspection, the Council's Engineer/Representative will check the conformance and the works to be carried out by the contractor with Council specifications and advise of any amendments required.

FORMWORK INSPECTION

The contractor shall advise the Engineer of the date and time for inspection of the completed formwork, giving at least forty-eight (48) hours notice. The formwork shall be checked for alignment, level and stability, together with sub-grade preparation. No concrete shall be poured before the formwork and the sub-grade have been approved.

FINAL INSPECTION

A final inspection will be made after the work has been completed.
Inspection will be made according to the circumstances, but should any inspection, beyond three be necessary due to any omission or unsatisfactory work on the part of the contractor, Council reserves the right to recover the cost of such additional inspection from the owner.

The remedying of any defects found in the final inspection shall be the responsibility of the owner, and he/she should therefore advise the contractor that final payment will not be made until a satisfactory Final inspection is carried out.

5. ALTERATION TO UTILITY SERVICES

Any alteration which may be necessary, on account of the construction of the crossing, to any water and/or gas mains or service, telephone cable, roof water drain, or other utility, is to be arranged by the owner with the Department or Authority concerned, or they shall engage a private licensed plumber as necessary. Any costs involved shall be paid by the owner. Prior to commencement of any works there must be an up to date 'Dial before you Dig' plans on site at all times. The applicant and/or contractor shall be responsible for any damage to public utilities, private services and/or drainage structures resulting from new works undertaken.

6. PROVISION FOR TRAFFIC

The owner will be responsible for and shall ensure that the contractor makes full provision for the safety of pedestrian and vehicular traffic during the progress of the work, and provides any necessary warning notices, barricades and lights.

7. PUBLIC SAFETY

The owner shall be liable for any accident, damage or injury to any person or thing resulting from the work.

8. EXCAVATION AND REMOVAL OF EXISTING WORK

The contractor shall excavate to the full dept of 200-225mm. Sub base to be replaced and compacted as directed with coarse sand or road base to a finished thickness of at least 75mm.

The sub-base or sub-grade shall be adequately compacted within the forms to the required depth below the finished surface for the concrete. The surface adjacent to the concrete paving shall be trimmed to conform thereto with grades and cross falls suitable to the area generally. This will include lifting and resetting footpath lawns where necessary.

9. DETAILS OF WORK

a) All work is to be carried out in accordance with Council's standard designs and specifications and relevant Australian Standards wherever applicable. Gutters and gutter crossings shall be 125mm or 150mm thick as directed, and slabs and wheel tracks for private crossings, to be used by cars only, shall be 125mm thick, and reinforced with No. F72 reinforcing mesh. In such circumstances, similar reinforcement shall be provided in gutter and gutter crossings.

b) Width of back of laybacks shall not exceed 3 metres for property with less than 15 metres frontage, except in special circumstances e.g. a two level entry to commercial premises.

   Additional width of layback may be permitted at a rate of 0.6m per 3m of frontage in excess of 15 metres, up to a maximum width of 9 metres.

c) Maximum width of vehicle entry or entries at the property alignment should not exceed:

   3 metres for properties with less than 10 metre frontage
   4 metres for properties with less than 12 metre frontage
   5 metres for properties with less than 15 metre frontage
   6 metres for properties with less than 20 metre frontage
   7 metres for properties with less than 30 metre frontage
   20% of the frontage for properties exceeding 30 metre frontage

10. TIMBERING, CONCRETE, ETC

Timbering, mixing and placing of concrete shall be carried out in accordance with Council's specification (All in-situ kerb, gutter and driveway shall comply with AS3600 current edition and Formwork to conform to requirement of AS 3610). The compressive strength of the concrete is to be minimum 25MPa – "No Coloured Concrete". The compaction of the sub grade or sub-base shall be in accordance with Maximum density ratio of Sub Course 98% and Sub Grade 95%

11. EXPANSION JOINTS

Where directed by the Council Engineer, expansion joints shall be provided to the full depth of the concrete, filled with 12mm thick bituminous jointing material.

12. FINISH

Concrete shall be tamped and screeded to the correct surface levels without scraping off the fine surface mixture and with minimum working of the surface, and shall be given a final even non-skid finish with a wooden float. Edges shall be finished with a 25mm radius bull nose.

13. HYDRANT BOXES ETC

The protective boxes over any hydrant, gas cocks, or the like shall be adjusted by the contractor so that their lids are flush with the surface.

14. TREES

No tree in the road reserve is to be removed without the written consent of Council. Any tree so removed or damaged shall be replaced at the applicant's expense in accordance with the Council policy in this matter. A minimum driveway clearance from any significant street tree needs to be maintained, or as directed by Councils Engineer or Tree Preservation Officer.

15. OTHER COSTS

Other costs met by the applicant include items such as fences; gates; additional required earthworks; returfing and regrading; damaged and unsafe footpaths; damaged kerb and gutter; tree relocation; pruning of tree roots; vegetation pruning; reconnecting of roof water drainage and any other works which may be specified on site by the Council Engineer that have been or will be affected due to new driveway works.

CLEANING UP

Immediately after concreting, all concrete or mortar spilt on road or foot pavements shall be washed and swept up, and the areas left clean. No concrete or mortar shall be allowed to enter any part of the drainage system. The Contractor shall remove all surplus material and shall clean up and leave safe and tidy the whole of the area affected by works carried out.

16. Development consent is required where the whole or any part of the proposed work constitutes "development" within the meaning of the *Environmental Planning and Assessment Act 1979* (NSW) and is not otherwise "exempt development" or "complying development" within the meaning of that Act. In addition, development consent is required where the whole or any part of the proposed work involves, will affect, or will take place on or to, an "item of the environmental heritage" within the meaning of *Manly Local Environmental Plan 1988* (NSW).

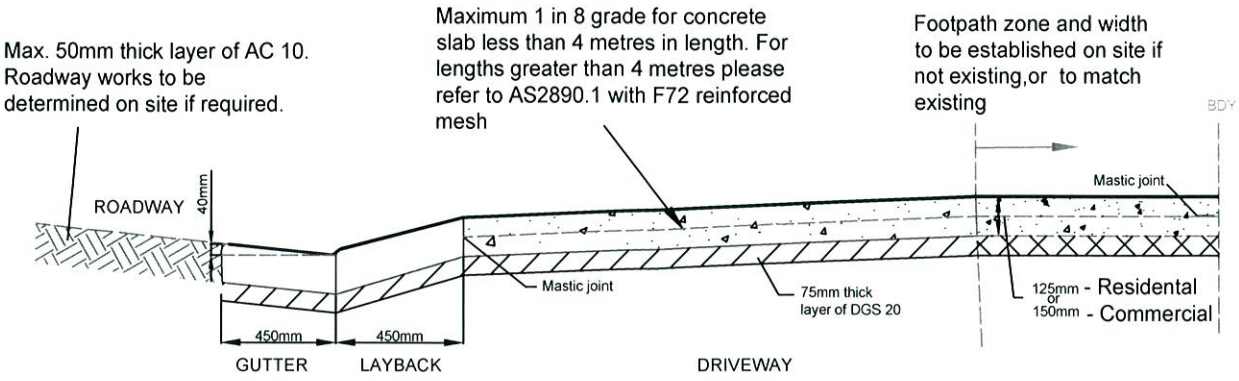

TYPICAL LONGITUDINAL SECTION - RESIDENTIAL DRIVEWAY

Not to scale

To be submitted @ 1:20 Scale

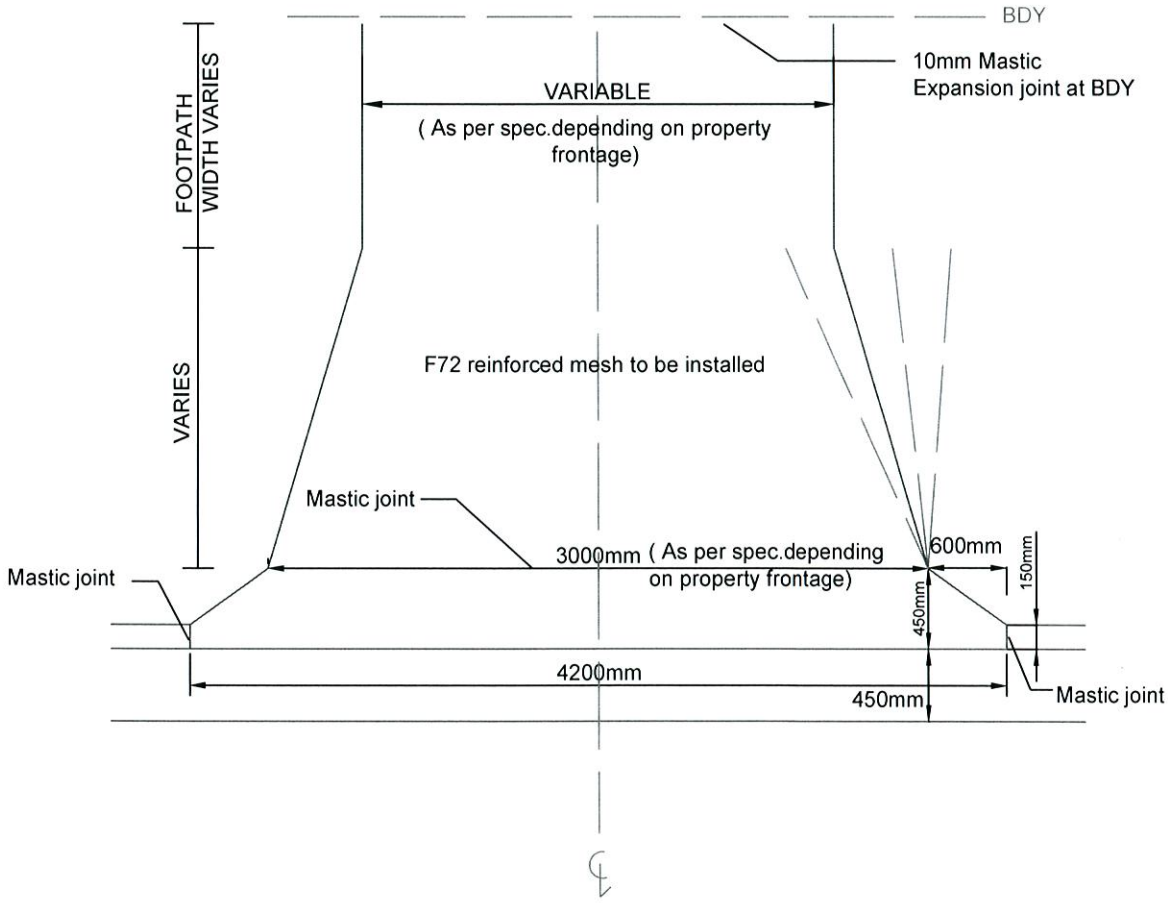

TYPICAL SLAB

Not to scale

To be submitted @ 1:100 Scale